S. KALIMNOS S.A.

ΕΞΟΠΛΙΣΜΟΙ ΒΥΤΙΟΦΟΡΩΝ ΠΡΑΤΗΡΙΩΝ ΚΑΥΣΙΜΩΝ • TANK TRUCK & SERVICE STATION EQUIPMENT

SK2200
Gauging Dipstick

DESIGN CHARACTERISTICS

Durable construction of aluminium alloy along with anodized replaceable sticks make the SK2200 Dipstick assembly the simplest solution for accurate physical measuring of the tank's content. It comes in two variants SK2200B for bold fixing and SK2200T for threaded fixing.

- **Durable Construction** of the body made of aluminium alloy.
- **Bolded or Threaded** fixing available.
- **Anodized** aluminium replaceable measuring sticks.
- **Spring Loaded** sealing mechanism.
- **Drop Test** approved for safety in case of tank overturn.
- **Easy Installation** - fits in the standard accessory ports of the SK3000 manhole cover series.

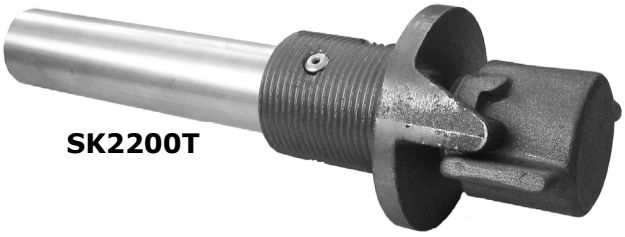

OVERALL DIMENSIONS

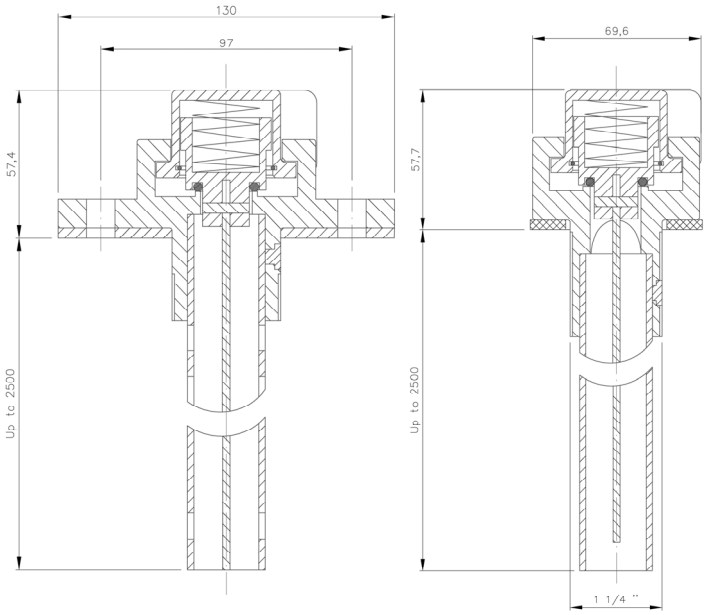

Technical Data

SK2200T 2m long Threaded Dipstick Assembly	: 1.6	kgr
SK2200B 2m long Bolded Dipstick Assembly	: 1.8	kgr

6° χλμ Θεσσαλονίκης Κατερίνης, 57009 Καλοχώρι, ΕΛΛΑΣ • 6th klm Thessalonica Katerini, 57009 Kalohori, GREECE
Tel.:+30 2310 753126, +30 2310 754110, FAX:+30 2310 753979 e-mail: info@kalimnosequip.gr, url: www.kalimnosequip.gr